POINT I/O Module

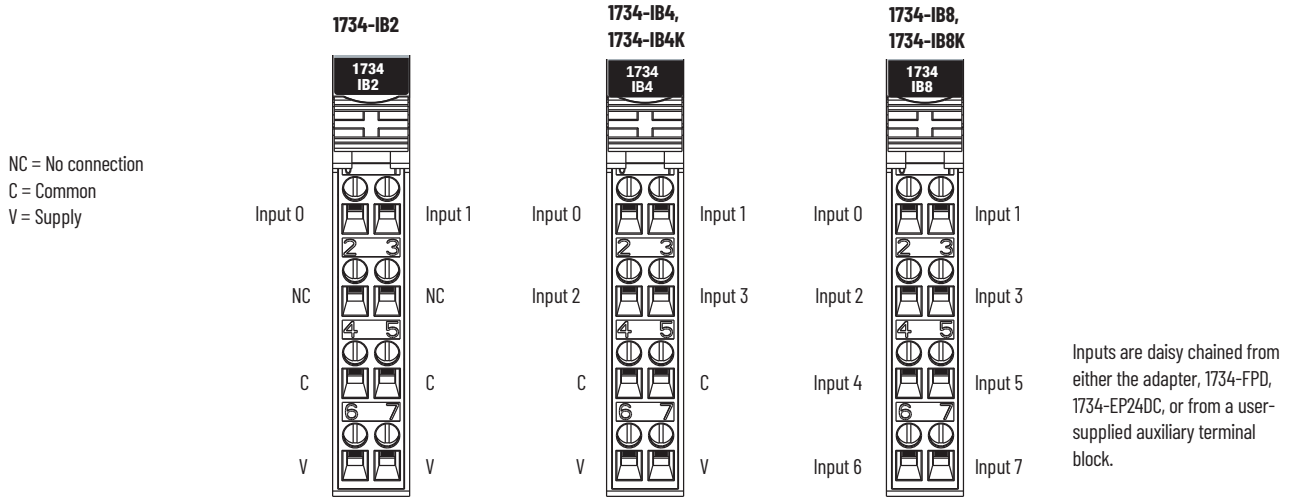

Wiring for 1734-IB2 – Sink Input

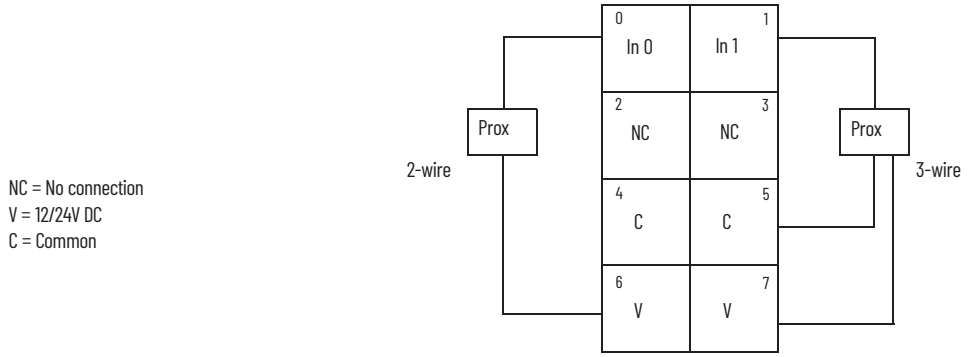

Channel	Input	Common	Voltage
0	0	4	6
1	1	5	7
Connect common on 3-wire proximity switches. 12/24V DC is supplied through the internal power bus.			

Wiring for 1734-IB4, 1734-IB4K – Sink Input

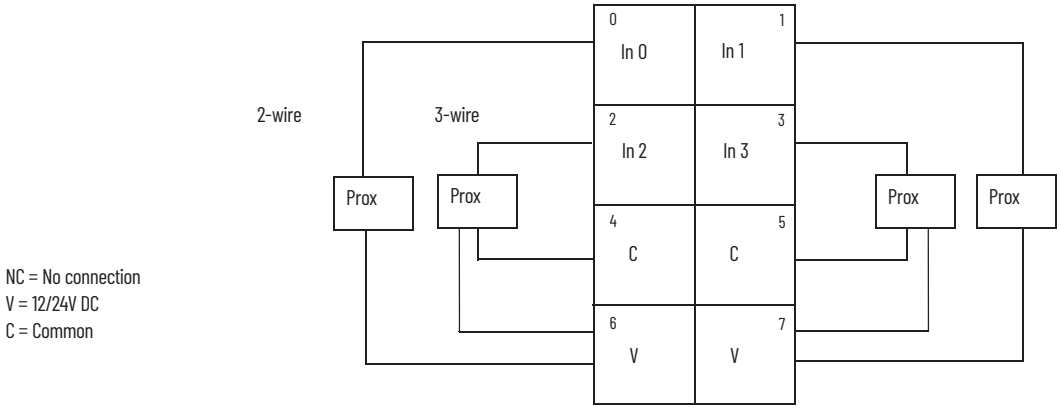

Channel	Input	Common	Voltage
0	0	4	6
1	1	5	7
2	2	4	6
3	3	5	7
Connect common on 3-wire proximity switches. 12/24V DC is supplied through the internal power bus.			